arteche

INSTRUMENT TRANSFORMERS. MEDIUM VOLTAGE OUTDOOR.

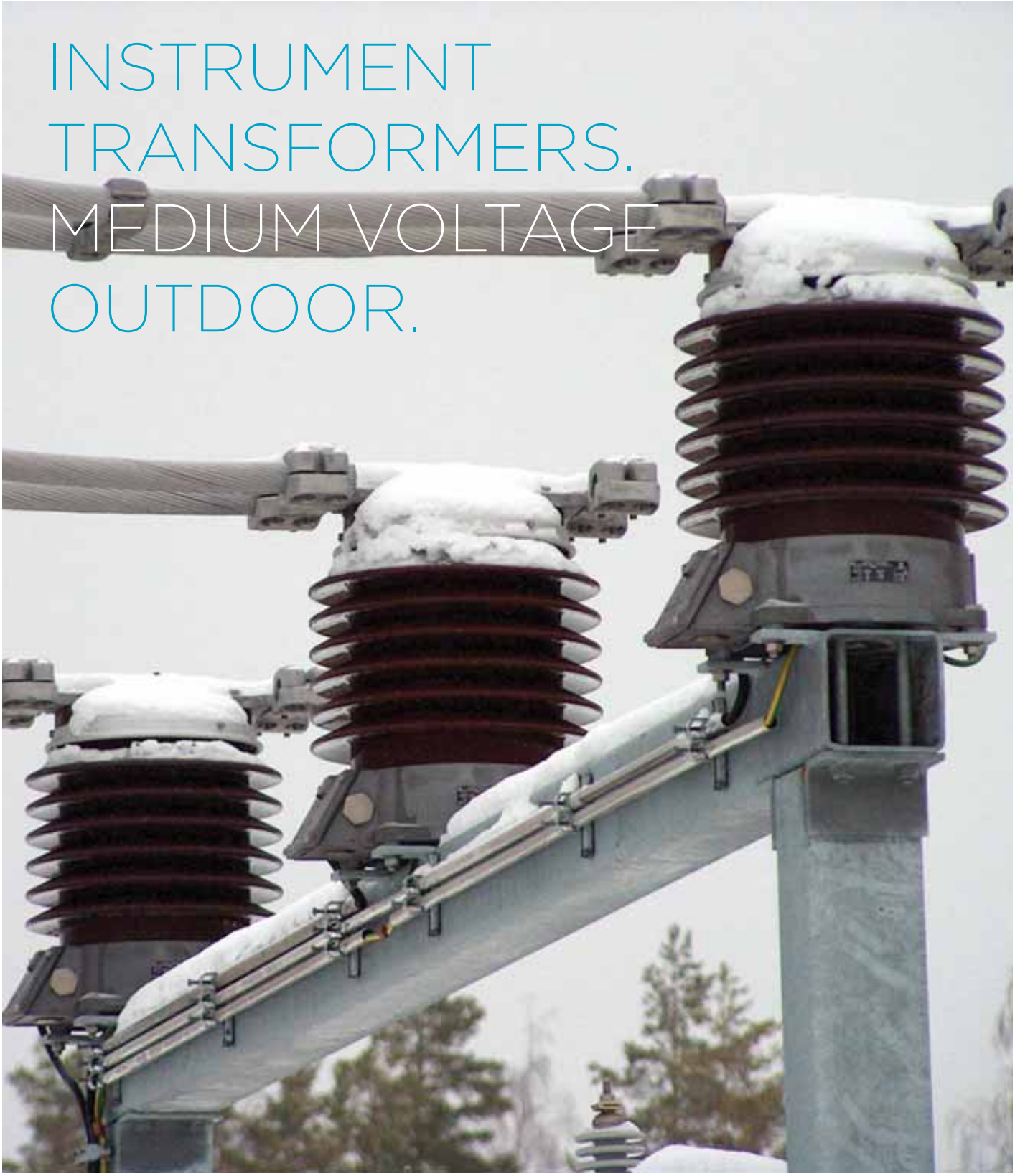

This document may be subject to changes. Contact ARTECHE to confirm the characteristics and availability of the products described here.

Moving together

CONTENTS

1. Current transformers | 4

2. Inductive voltage transformers | 12

3. Combined transformers | 20

4. Other technologies
   - SRS sensors | 25
   - PPE wall bushings | 25
   - High voltage instrument transformers | 25

5. Quality, Environment and Service | 26

arteche

1. CURRENT TRANSFORMERS
Dry insulation

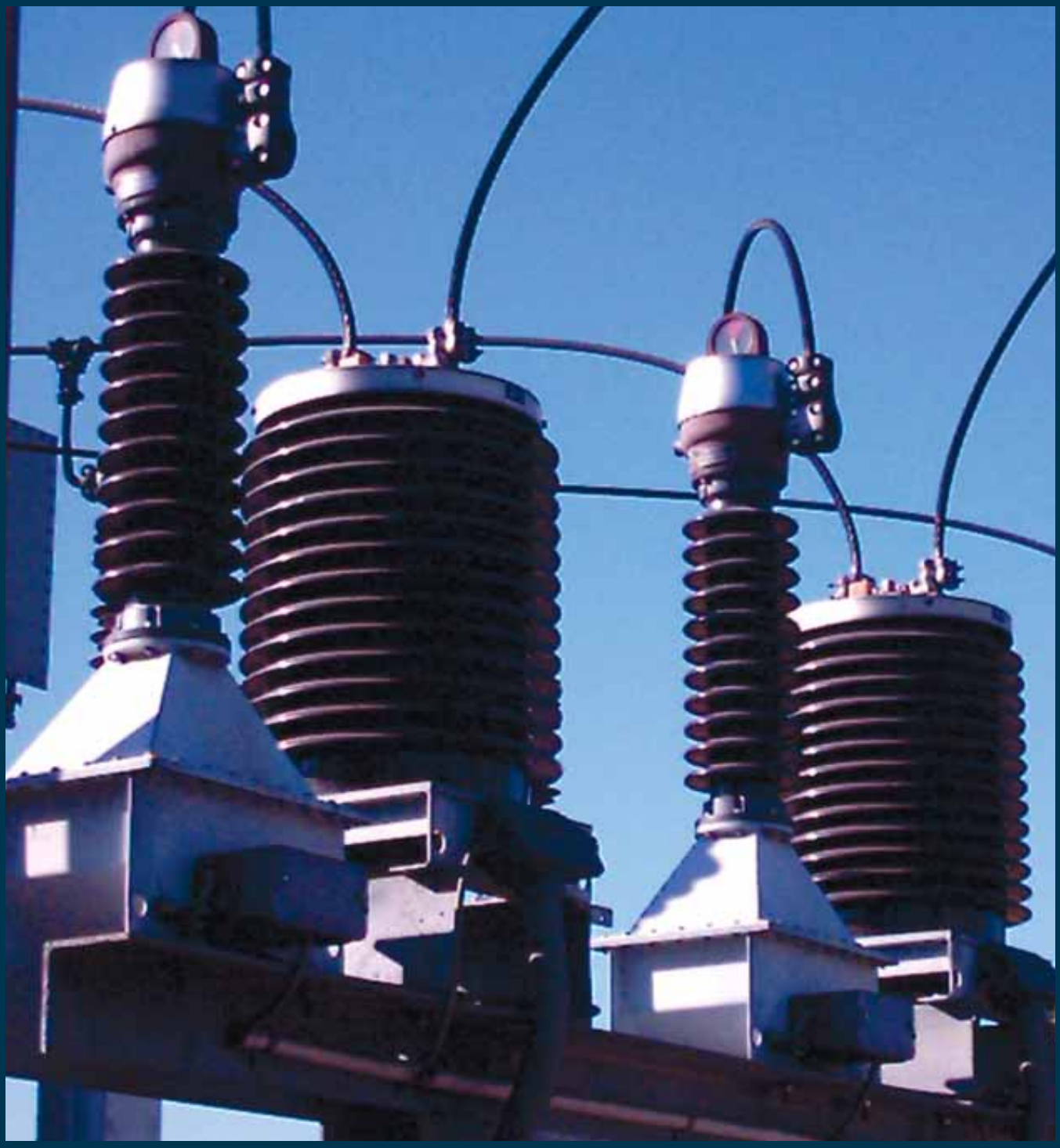

INTRODUCTION

Current transformers are designed to provide a scaled down replica of the current in the MV line and isolate the measuring instruments, meters, relays, etc. from the power circuit.

- CR model transformers with epoxy resin internal insulation, cycloaliphatic resin external insulation and active parts located in the central part of the transformer. Up to 72.5 kV.
- CE model transformers with epoxy resin internal insulation, cycloaliphatic resin external insulation and active parts located in the top part of the transformer. Up to 72.5 kV.
- CX model transformers with epoxy resin internal insulation, porcelain or silicone rubber external insulation and active parts located in the central part of the transformer. Up to 72.5 kV.
- CPE model transformers with epoxy resin internal insulation, cycloaliphatic resin external insulation and active parts located around the pass-through primary conductor. Up to 36 kV.

› Model CX

› Model CR

› Model CE

› Model CPE

Model CX up to 72,5 kV.

Model CR up to 72,5 kV.

Model CE up to 72,5 kV.

Model CPE up to 36 kV.

SECTIONS

1. Primary terminals.
2. Equipotential ring.
3. Porcelain or silicone rubber insulator
4. Cycloaliphatic resin insulator.
5. Epoxy resin.
6. Primary windings.
7. Cores and secondary windings.
8. Secondary terminal box.

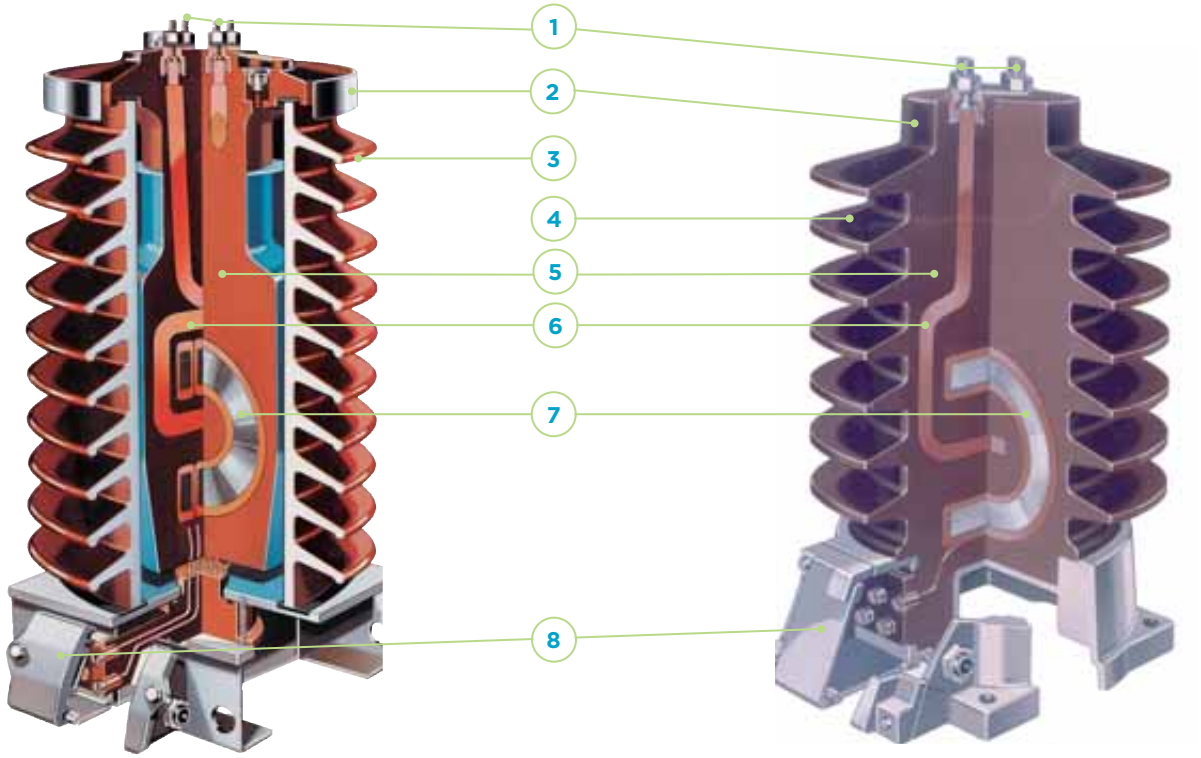

› Model CX

› Model CR

› 36 kV Current transformers (CR). Electronet Services. (New Zealand)

APPLICATIONS

Current transformers for outdoor service have several applications.

Examples of applications:

1. Revenue metering.
2. Protection for substations and distribution lines.
3. Protection for power transformers.
4. Protection for capacitor banks.
5. Outdoor-outdoor wall bushings (model CPE).

› 24 kV Current transformers (CX). protection for substation. Iberdrola (Spain).

› 36 kV Current transformers (CR) and voltage transformers (UR). Revenue metering. Electronet Services (New Zealand).

72.5 kV Current transformer (CX) used for wind farm substation protection. Iberdrola (Spain)

DESIGN AND MANUFACTURE

ARTECHE current transformers with dry insulation are vacuum cast with epoxy resin, which fix and isolates the active parts, creating a rigid body with high mechanical resistance, excellent thermal performance and dielectric withstand capability.

CR, CE and CPE models are housed in a cycloaliphatic resin body. This insulator provides for long creepage distance, robust mechanical strength, excellent arc tracking properties and resistance to UV exposure.

CX models have a resin body inside a hollow porcelain or silicone rubber insulator which provides for long creepage distance and superior resistance to the elements. The chamber between the resin body and the insulator is hermetically sealed with nitrile rubber gaskets; this space is filled with oil for insulation levels above 36 kV.

For CE models, the active parts are located in the top part of the transformer, which is coated with an external metallic layer for a better electrical field control.

For CPE models, the active parts form a toroidal transformer around the primary conductor. It's a wall bushing current transformer with or without integrated primary bar.

The active parts in models CR and CX are located approximately in the center of the resin body.

For all models, the secondary outputs are located in the bottom part. Rings or deflector shields are used to properly distribute the electrical field throughout the insulator.

THE ELECTRICAL FIELD IN A CURRENT TRANSFORMER

WITHOUT EQUIPOTENTIAL RING | WITH EQUIPOTENTIAL RING

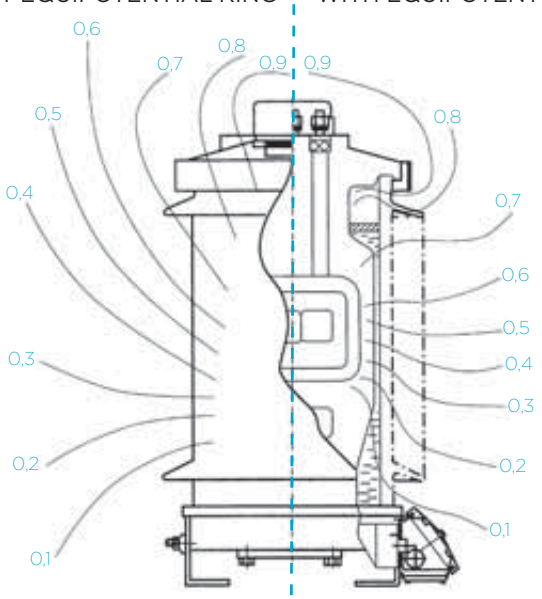

The equipotential ring significantly extends the service life of the transformer by preventing the deterioration of the resin in the transformer head because the ring prevents the resin from being subjected to any potential gradient. This can be seen in the figure included here, which shows the distribution of the field lines with or without equipotential ring.

This equipotential ring is a standard accessory in all ARTECHE MV Current transformers with either cycloaliphatic resin, porcelain or silicone rubber insulation.

ADVANTAGES

- Variety of designs for greater adaptation to client needs.
- Cast in high dielectric strength resin.
- Very high and invariable accuracy (up to 0.1%) for the service life of the equipment.
- Ratio change by primary or the secondary tapping.
- Primary winding with spark gap for overvoltage protection (CX, CR).
- Compliance with a wide range of creepage distances, depending on customer specifications.
- Excellent response under extreme weather conditions such as temperatures of -55°C or +50°C; UV radiation; altitudes over 1000 m.a.s.l., saline or polluted environments, earthquakes, seismic hazard areas, etc
- Compact design for easy handling.
- Maintenance free. No spare parts needed throughout its lifespan.
- May be transported, stored and installed vertically or horizontally.
- The materials used for construction are recyclable and resistant to the elements, adhering to environmental regulations.
- Each transformer is routine tested for partial discharges, tangent delta (DDF), insulation and accuracy. Designed to withstand all the type test included in the standards.
- Compliance to any international standard: IEC, IEEE, UNE, BS, VDE, SS, CAN, AS, NBR, JIS, GOST, NF and others.
- Officially homologated In-house testing facilities.

OPTIONS:

- Wide range of primary and secondary terminals.
- Brown or gray insulators.
- Porcelain or silicone rubber insulators (model CX).
- Sealable secondary box.
- Corrosion-resistant metallic components, and stainless steel washers, nuts and bolts.
- Different cable glands available in the secondary terminal box.

Option for silicon rubber insulator.

Detail of cable glands designed based on customer specifications.

Wide range of primary terminals.

Detail of the spark gap in a CX for protecting the primary winding.

RANGE

ARTECHE current transformers with dry insulation are named using three letters and two numbers, which indicate their maximum service voltage.

The first two letters indicate the type of transformer and the third letter indicates the model within the product line. Current transformers are named using the letters CX (porcelain or silicone rubber insulator), CR (cycloaliphatic resin insulation), CE (inverted, cycloaliphatic resin insulation) or CPE (cycloaliphatic resin insulation with toroidal transformer).

Current ratios: all types of combinations possible in a single device. Secondary windings for:

- Protection: all protection types, including: low induction linear cores, etc.
- Metering: accuracy classes for any type of metering and billing (including extra-high accuracy class 0.1 / 0.15 with extended current range).

Number of secondary windings: as per customer needs, up to 4 secondary windings are possible in a single device.

The following tables show the range currently available. These characteristics are merely indicative; ARTECHE can manufacture these transformers to comply with any domestic or international standard.

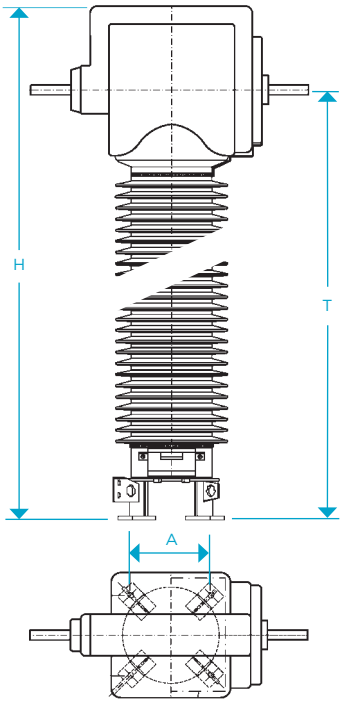

Fig. 1 - Model CE

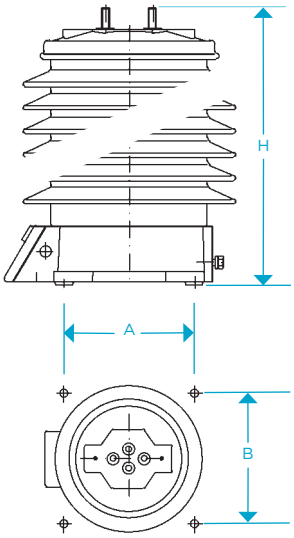

Fig. 2 - Models CX / CR

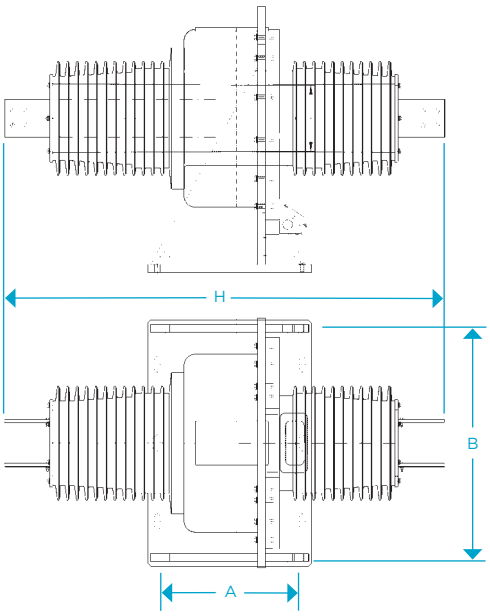

Fig. 3 - Model CPE

OUTDOOR MEDIUM VOLTAGE TRANSFORMERS > Current transformers

Current transformers

Model	Highest voltage (kV)	Rated insulation level		Standard creepage distance (mm)	Dimensions				Weight (kg)
		Power frequency (kV)	Lightning Impulse (kVp)		Fig.	A (mm)	B (mm)	H (mm)	
Cycloaliphatic resin insulation									
CRB-17	17.5	38	95	420	2	219	254	335	22
CRE-17	17.5	38	95	440	2	219	254	300	35
CRB-24	24	50	125	590	2	219	254	371	24
CRE-24	24	50	125	620	2	219	254	370	40
CRF-24	24	50	125	810	2	219	254	370	45
CRE-36	36	70	170	925	2	219	254	475	45
CRF-36	36	70	170	915	2	219	254	440	50
CRH-36	36	70	170	1250	2	250	250	625	115
CRK-36	36	70	170	1135	2	350	350	551	146
CRH-52	52	90	250	1785	2	250	250	797	135
CRK-52	52	90	250	1815	2	350	350	690	185
CRH-72	72.5	140	325	1785	2	250	250	797	135
CRK-72	72.5	140	325	1815	2	350	350	877	235
CE-034	36	70	170	920	1	250	250	1135/855*	265
CE-046	52	90	250	1300	1	250	250	1340/1070*	270
CE-069	72.5	140	325	1815	1	350	350	1576/1305*	350
Porcelain or silicone rubber insulation									
CXD-24	24	50	125	744	2	210	210	462	43
CXE-36	36	70	170	900	2	250	250	532	80
CXE-52	52	90	250	1440	2	250	250	712	111
CXG-52	52	90	250	1560	2	250	250	798	186
CXH-52	52	90	250	1560	2	330	330	800	263
CXG-72	72.5	140	325	1860	2	250	250	918	190
CXH-72	72.5	140	325	1860	2	330	330	920	305
Cycloaliphatic insulation									
CPE-36	36	70	170	1080	3	500	460	1395	270

* T dimension.
Approximate dimensions and weights. For special requirements, please consult.

› 72,5 kV Current transformer (CX). Yuandon Textil Co. (Taiwan).

› 72,5 kV Current transformer (CX). Nuon (the Netherlands).

arteche

2. INDUCTIVE VOLTAGE TRANSFORMERS
Dry and oil-paper insulation

INTRODUCTION

Inductive voltage transformers are designed to provide a scaled down replica of the voltage in the MV line and isolate the measuring instruments, meters, relays, etc. from the power circuit.

- UR model are single-phase transformers with epoxy resin internal insulation and cycloaliphatic resin external insulation. Up to 72.5 kV.
- VR model are two-phase transformers with epoxy resin internal insulation and cycloaliphatic resin external insulation. Up to 52 kV.
- UJ model are single-phase transformers with epoxy resin internal insulation, a metal-covered main body and silicone rubber insulators. Up to 36 kV.
- VJ model are two-phase transformers with epoxy resin internal insulation, a metal-covered main body and silicone rubber insulators. Up to 36 kV.
- UZ and UT model are single-phase transformers with oil-paper internal insulation and porcelain or silicone rubber insulators. Up to 72 kV.
- VZ model single-phase transformers with oil-paper internal insulation and porcelain or silicone rubber insulators. Up to 36 kV.

› Model UR

› Model VJ

› Model VZK

› Model UTB

Models UR/UT up to 72,5 kV.

Model VR up to 52 kV.

Models UJ/VJ up to 36 kV.

Models UZK/VZK up to 36 kV.

SECTION

1. Primary terminals.
2. Porcelain or silicone rubber insulator.
3. Oil-paper insulation.
4. Secondary terminal box.
5. Primary windings.
6. Secondary windings.
7. Magnetic core.

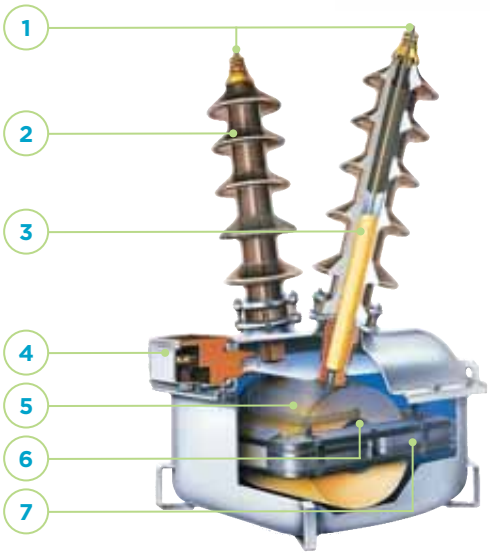

› Model VZK

APPLICATIONS

Voltage transformers for outdoor service have several applications.

Examples of applications:

1. Revenue metering.
2. Protection for substations and distribution lines.
3. Protection for capacitor banks.
4. Discharge of lines and capacitor banks.
5. Power supply for auxiliary services.
6. Power supply for switching equipment in distribution automation (reclosers, disconnects or switches).

› 72.5 kV Current transformers (CX) and voltage transformers (UT) for power transformer protection. Iberdrola (Spain).

› 24 kV Voltage transformers (VJ). Auxiliary power supply for switching equipment in distribution automation.

› 36 kV Current transformers (CR) and voltage transformers (UR). Revenue metering. Electronet Services (New Zealand).

ARTECHE instrument transformers are installed in over 150 countries.

DESIGN AND MANUFACTURE

ARTECHE voltage transformers with dry insulation are vacuum cast with epoxy resin, which fix and isolates the active parts, creating a rigid body with high mechanical resistance, excellent thermal performance and dielectric withstand capability.

UR/VR models are housed in a cycloaliphatic resin body. This insulator provides for long creepage distance, robust mechanical strength, excellent arc tracking properties and resistance to UV exposure.

UJ/VJ have their resin body coated with a grounded external metallic layer to control their electrical fields. The pole(s) have external silicone rubber insulation with superior resistance to the elements.

ARTECHE's voltage transformers with oil-paper insulation (UZ/VZ, UT) have their core and windings (active parts) inside a metal tank. The internal insulation is made by oil impregnated paper. The external insulator may be porcelain or silicone rubber. The voltage transformer is hermetically sealed.

The U models have one single pole for phase-earth connections while the V models have two poles for phase-phase connection.

› 72.5 kV UT Transformers. Panama.

› 36 kV UZK Transformers. Transpower. (New Zealand).

ADVANTAGES

- Variety of designs for greater adaptation to client needs.
- Cast in high dielectric strength resin (UR/VR, UJ/VJ).
- Very high exact and invariable accuracy (up to 0.1%) for the service life of the equipment.
- Option for double primary ratio.
- Compliance with a wide range of creepage distances, depending on customer specifications.
- Excellent response under extreme weather conditions such as temperatures of -55°C or +50°C; UV radiation; altitudes over 1000 m.a.s.l., saline or polluted environments, earthquakes, seismic hazard areas, etc
- Compact design for easy handling.
- Maintenance free. No spare parts needed throughout its lifespan.
- May be transported, stored and installed vertically or horizontally.
- The materials used for construction are recyclable and resistant to the elements, adhering to environmental regulations.
- Each transformer is routine tested for partial discharges, tangent delta (DDF), insulation and accuracy. Designed to withstand all the type test included in the standards.
- Compliance to any international standard: IEC, IEEE, UNE, BS, VDE, SS, CAN, AS, NBR, JIS, GOST, NF and others.
- Officially homologated In-house testing facilities.

OPTIONS:

- Wide range of primary and secondary terminals.
- Brown or gray insulators.
- Porcelain or silicone rubber insulators (models UZ/VZ, UT).
- Sealable secondary box.
- Corrosion-resistant metallic components, and stainless steel washers, nuts and bolts.
- Different cable glands available in the secondary terminal box.
- Oil sampling valve for periodic analysis (models UZ/VZ, UT).

- Detail of cable glands designed based on customer specifications.
- 36 kV Voltage transformers (URS) installed horizontally.
- Oil sampling valve for quick and safe operation.

ARTECHE transformers are installed in over 150 countries.

RANGE

ARTECHE voltage transformers with dry or oil-paper insulation are named using three letters and two numbers, which indicate their maximum service voltage.

The first two letters indicate the type of transformer and the third letter indicates the model within the product line.

Voltage transformers with the letters VR, VJ or VZ are for phase-phase connections; and those with UR, UJ, UZ or UT are for phase-earth.

Standard accuracy classes and burdens:

- In accordance with IEC standards:
  100 VA Class 0.2 / 3P
  250 VA Class 0.5 / 3P
- In accordance with IEEE standards:
  0.3 WXYZ
  1.2 WXYZ, ZZ

Higher accuracy classes and burdens available.

The following tables show the range currently available. These characteristics are merely indicative; ARTECHE can manufacture these transformers to comply with any domestic or international standard.

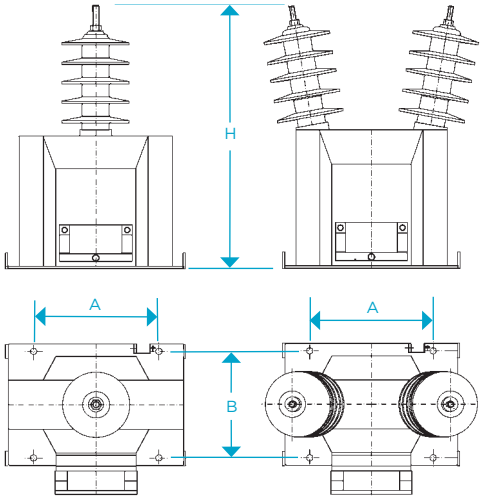

Fig. 5 - Model UR

Fig. 6 - Model VR

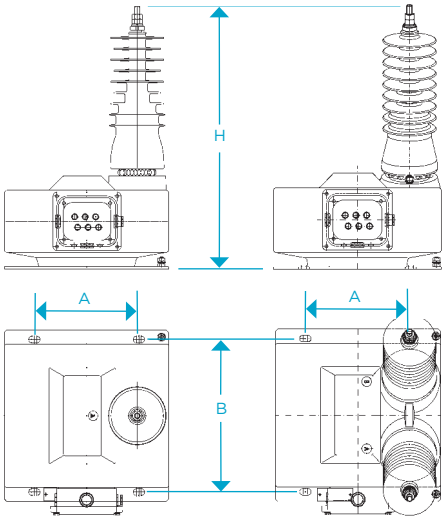

Fig. 7 - Model UJ

Fig. 8 - Model VJ

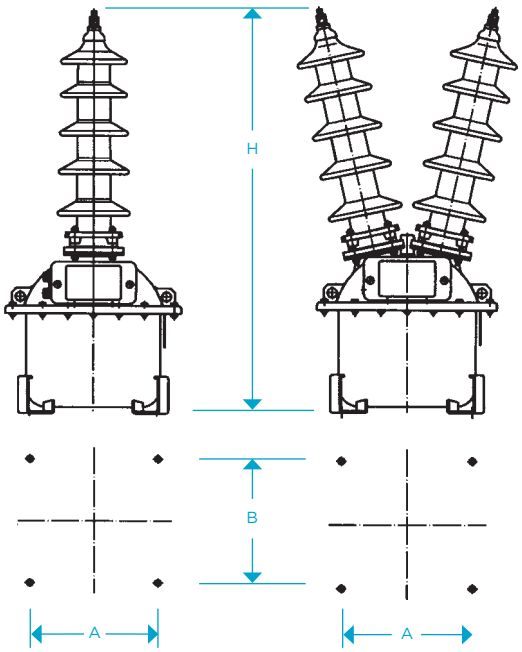

Fig. 9 - Model UZK

Fig. 10 - Model VZK

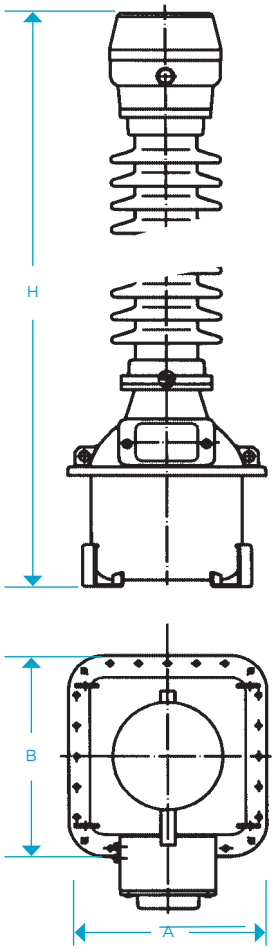

Fig. 11 - Model UT

OUTDOOR MEDIUM VOLTAGE TRANSFORMERS > Voltage transformers

Voltage transformers										
Model	Highest voltage (kV)	Rated insulation level		Standard creepage distance (mm)	Thermal burden (VA)	Dimensions				Weight (kg)
		Power frequency (kV)	Lightning Impulse (kVp)			Fig.	A (mm)	B (mm)	H (mm)	
Cycloaliphatic resin insulation										
URJ-17	17.5	38	95	550	400	5	254	219	453	41
URL-17	17.5	38	95	545	450	5	254	219	453	33
URN-17	17.5	38	95	570	1500	5	254	219	500	55
URJ-24	24	50	125	910	400	5	254	219	575	43
URL-24	24	50	125	765	450	5	254	219	533	35
URN-24	24	50	125	800	600	5	254	219	570	57
URN-36	36	70	170	1340	600	5	254	219	708	60
URS-36	36	70	170	1260	1500	5	350	200	715	68
URU-52	52	90	250	1640	2500	5	500	400	1030	152
URU-72	72.5	140	325	2360	2500	6	500	400	1130	173
VRJ-17	17.5	38	95	615	400	6	254	219	450	43
VRL-17	17.5	38	95	610	600	6	254	219	435	38
VRN-17	17.5	38	95	620	1500	6	254	219	570	59
VRJ-24	24	50	125	955	750	6	254	219	560	45
VRL-24	24	50	125	955	750	6	254	219	515	40
VRN-24	24	50	125	790	750	5	254	219	570	59
VRN-36	36	70	170	1055	750	6	254	219	630	60
VRS-36	36	70	170	1140	1500	5	350	200	696	83
VRU-52	52	90	250	1552	4000	6	500	400	986	179
Silicone rubber insulation										
UJL-24	24	50	125	760	450	7	220	320	565	49
UJN-36	36	70	170	1360	600	7	220	320	787	85
VJL-24	24	50	125	760	500	8	220	320	550	60
VJN-36	36	70	170	1360	600	8	220	320	765	100
Oil-paper insulation										
UZK-17	17.5	38	95	790	1500	9	300	300	970	85
UZK-24	24	50	125	790	1500	9	300	300	970	85
UZK-36	36	70	170	790	1500	9	300	300	970	85
UTB-52	52	90	250	2355	1500	11	300	300	1340	100
UTD-52	52	90	250	2355	2500	11	300	300	1410	150
UTB-72	72.5	140	325	2355	1500	11	300	300	1340	100
UTD-72	72.5	140	325	2355	2500	11	300	300	1410	150
UTE-72	72.5	140	325	2355	3000	11	450	450	1425	250
VZK-17	17.5	38	95	790	1500	10	300	300	940	100
VZK-24	24	50	125	790	1500	10	300	300	940	100
VZK-36	36	70	170	790	1500	10	300	300	940	100
UTD-72	72,5	140	325	1.825	2.000	7	300	300	1.395	150

Approximate dimensions and weights. For special requirements, please consult.

arteche

3. COMBINED TRANSFORMERS
Dry insulation

INTRODUCTION

Combined instrument transformers contain a current transformer and a single-pole voltage transformer within the same resin body.

- KM model transformers with epoxy resin internal insulation and cycloaliphatic resin external insulation. Up to 36 kV.

Model KM up to 36 kV.

› Model KM

APPLICATIONS

Combined transformers for outdoor service are ideal for use at metering points.

They are particularly useful in installations with space or cost limitations.

Examples of applications:

ARTECHE offers three-phase metering units for pole mounting.

- Model MK. Three combined transformers in a single metal structure.
- Model ME. Three current transformers and three voltage transformers in a single metal structure.

› Model MK.
Metering unit

› Model ME.
Metering unit

DESIGN AND MANUFACTURE

ARTECHE combined transformers with dry insulation are vacuum cast with epoxy resin, which fix and isolates the active parts, creating a rigid body with high mechanical resistance, excellent thermal performance and dielectric withstand capability. They are housed in a cycloaliphatic resin body. This insulator provides for long creepage distance, robust mechanical strength, excellent arc tracking properties and resistance to UV exposure.

ADVANTAGES

- Variety of designs for greater adaptation to client needs.
- Cast in high dielectric strength resin.
- Very high and invariable accuracy (up to 0.1%) for the service life of the equipment.
- Wide range of primary currents.
- Current ratio change by primary or secondary tapping.
- Option for double primary ratio.
- Compliance with a wide range of creepage distances, depending on customer specifications.
- Excellent response under extreme weather conditions such as temperatures of -55°C or +50°C; UV radiation; altitudes over 1000 m.a.s.l., saline or polluted environments, earthquakes, seismic hazard areas, etc
- Compact design for easy handling.
- Maintenance free. No spare parts needed throughout its lifespan.
- May be transported, stored and installed vertically or horizontally.
- The materials used for construction are recyclable and resistant to the elements, adhering to environmental regulations.
- Each transformer is routine tested for partial discharges, tangent delta (DDF), insulation and accuracy. Designed to withstand all the type test included in the standards.
- Compliance to any international standard: IEC, IEEE, UNE, BS, VDE, SS, CAN, AS, NBR, JIS, GOST, NF and others.
- Officially homologated In-house testing facilities.

› 17.5 kV Metering unit (MK) for revenue metering. CFE (Mexico).

RANGE

ARTECHE combined transformers with dry insulation are named using three letters and two numbers, which indicate their maximum service voltage.

The first two letters indicate the transformer's type and the third letter indicates the model within the product line.

Current ratios: all types of combinations possible in a single device.

Secondary windings for:

- Protection: all possible types, including: low induction, linear cores, etc.
- Metering: accuracy classes for any type of metering and billing (including extra-high accuracy class 0.1/0.15 with extended current range).

Standard accuracy classes and burdens for voltage transformer:

- According to IEC standards:
  100 VA Clase 0,2 / 3P
  250 VA Clase 0,5 / 3P
- According to IEEE standards:
  0,3 WXYZ
  1.2 WXYZ, ZZ

Higher accuracy classes and burdens available.

The following tables show the range currently available. These characteristics are merely indicative; ARTECHE can manufacture these transformers to comply with any domestic or international standard.

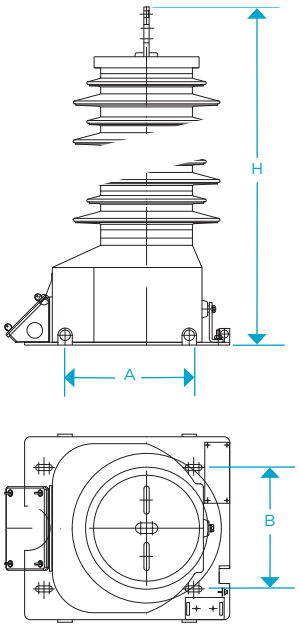

Fig. 12 - Model KM

Combined transformers

Model	Highest voltage (kV)	Rated insulation level		Standard creepage distance (mm)	Thermal burden (VA)	Dimensions				Weight (kg)
		Power frequency (kV)	Lightning Impulse (kVp)			Fig.	A (mm)	B (mm)	H (mm)	
Cycloaliphatic resin insulation										
KMB-17	17.5	38	95	577	750	12	219	270	474	60
KMB-24	24	50	125	770	750	12	219	270	582	655
KMF-36	36	70	170	1194	750	12	254	330	638	120

Approximate dimensions and weights. For special requirements, please consult.

arteche

4. OTHER TECHNOLOGIES
SRS sensors
PPE wall bushings
High voltage transformers

› 72.5 kV Oil-paper current transformers (CA). Endesa (Spain).

SRS SENSORS

The SRS-52 series features dry, outdoor-service voltage sensors. Its components are completely encapsulated, combining the technology of two top-quality epoxy resins: cycloaliphatic resin and type-B resin. In this way, excellent internal dielectric properties are achieved, as well as an excellent response to UV radiation and external insulation erosion. Thus, this equipment is maintenance-free and ensures a long mechanical and electrical life. The SRS-52 is designed to be installed vertically on poles or substation structures. Since its stainless steel base is drilled with standardized holes, it can be replaced if necessary.

The SRS-52 voltage sensor is a resistor divider; therefore, the secondary voltage is proportional to the primary voltage, without saturation.

The SRS-52 sensor is designed for outdoor service applications for measurement and/or protection for generation or distribution systems with voltages up to 52 kV.

HIGH VOLTAGE

ARTECHE has a wide range of high voltage transformers that can be used in medium voltage outdoor applications.

- Current transformers.
  - Oil-paper insulation, top-core type. Model CA from 36 kV.
  - Oil-paper insulation, hairpin type. Model CH from 36 kV.
  - SF6 insulation, top-core type. Model CG from 72.5 kV.
- Inductive voltage transformers.
  - Oil-paper insulation. Model UT from 52 kV.
- Capacitive voltage transformers.
  - Oil-paper insulation. Model DDB from 72.5 kV.
- Combined transformers.
  - Oil-paper insulation. Model KA from 36 kV.

For more information, refer to catalog: INSTRUMENT TRANSFORMERS. HIGH VOLTAGE.

PPE WALL BUSHINGS

The PPE-36 series features dry, outdoor-service wall bushings. Its components are completely encapsulated, combining the technology of two top-quality epoxy resins: cycloaliphatic resin and type-B resin. In this way, excellent internal dielectric properties are achieved, as well as an excellent response to UV radiation and external insulation erosion. Thus, this equipment is maintenance-free and ensures a long mechanical and electrical life.

The PPE-36 is designed to be installed vertically or horizontally on poles or substation structures. Since its aluminum base is drilled with standardized holes it can be replaced if necessary.

The wall bushing can pass through wall sections of 320 or 400 mm, and it can include a primary bar.

The PPE-36 wall bushing is designed for outdoor service applications for measurement and/or protection for generation or distribution systems with primary currents of up to 6000 amperes.

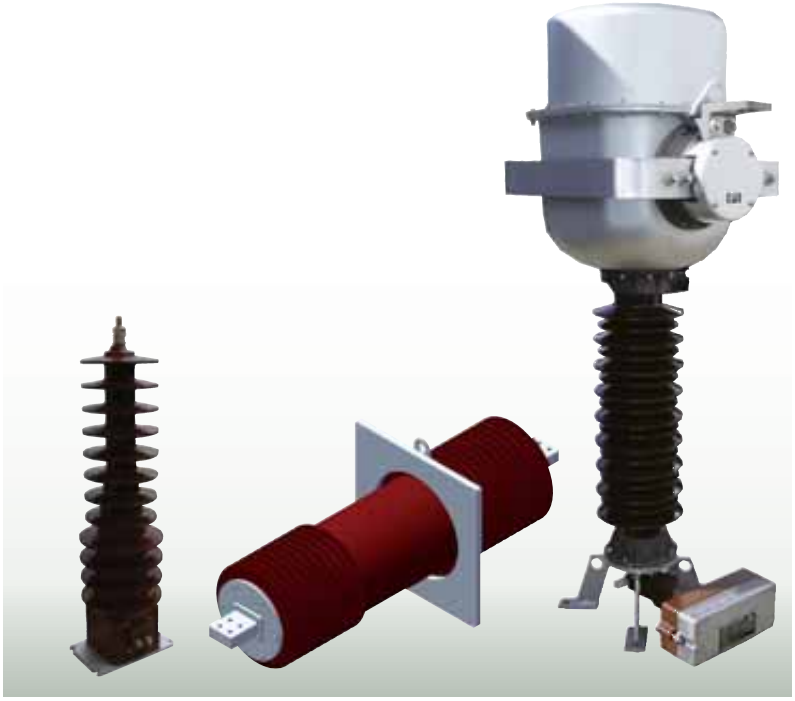

› SRS Sensor › PPE Wall bushings › CA Transformer

5. QUALITY, ENVIRONMENT AND SERVICE

Exceeding environmental regulations, ARTECHE has been able to minimize the use off hazardous materials, energy consumption and waste generation.

QUALITY & ENVIRONMENT

Everyone in the ARTECHE Group works under the criteria set out in our environmental and quality policy.

A sum of regulated procedures based on communication, teamwork, prevention analysis and continuous improvement, common to the whole organization.

- Advanced sustainability criteria in production and in the creation and development of new products.
- Compact designs, manufactured with minimal energy consumption and enviromental-friendly materials.
- Internal and external skill motivation programs.
- Advanced development of knowledge management.
- Quality agreements with utilities.
- Physico-chemical and electrical laboratories for testing under any International Standard.
- Type test reports issued by KEMA, CESI, LAPEM, RENARDIÈRES, etc.
- Final testing according to specific customer requirements.
- Approvals in more than 100 electricity companies.
- ISO 14001:2004.
- ISO 9001:2008.

ARTECHE has the experience, technology and capabilities of instrument transformers. Thus we provide the best solution available in the market.

- Physical and chemical laboratories conduct over 130 tests to certify the quality of raw materials.

SERVICE

- ARTECHE's service is based on a close relationship with the customers, reflected in the integrated post-sale assistance plan and structured client opinion system.
- In addition to ensuring rapid response, ARTECHE developed a continuous service improvement plan, which sustains an extensive training program with courses, publications, conferences, etc.
- ARTECHE's focus on service, with a broad experience leading us to be an active participant in the electrical organizations such as: IEC, IEEE, CIGRE, CIRED, ASINEL, etc.
- ARTECHE has production facilities in four continents (North America, South America, Europe, Asia and Australia) and more than 70 technical/commercial offices. Thus ARTECHE provides effective responses to the requirements of any customer and situation, based on the global knowledge acquired.

- The solutions ARTECHE has developed and expanded have made us an active participant in the most important electrical events and organizations.

Updates: ARTECHE_CT_trfMVO_EN
Version: A0

©ARTECHE